| NO OF SIGNALS | MATERIAL NUMBER | COMPLIANT PIN PLATING | DIM A | DIM B | DIM C |
|---|---|---|---|---|---|
| 12 | 46114-6120 | TIN | 53.01/2.087 | 53.51/2.107 | 5.45/.215 |
| 16 | 46114-6160 | TIN | 55.55/2.187 | 56.05/2.207 | |
| 20 | 46114-6200 | TIN | 58.09/2.287 | 58.59/2.307 | |
| 24 | 46114-6240 | TIN | 60.63/2.287 | 61.13/2.407 | |
| 28 | 46114-6280 | TIN | 63.17/2.387 | 63.67/2.507 | |
| 32 | 46114-6320 | TIN | 65.71/2.487 | 66.21/2.607 | |
| 36 | 46114-6360 | TIN | 68.25/2.587 | 68.75/2.707 | |
| 40 | 46114-6400 | TIN | 70.79/2.787 | 71.29/2.807 | |

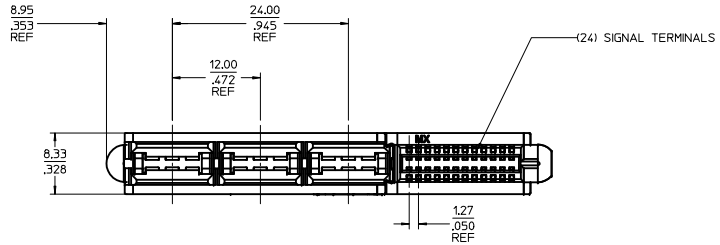


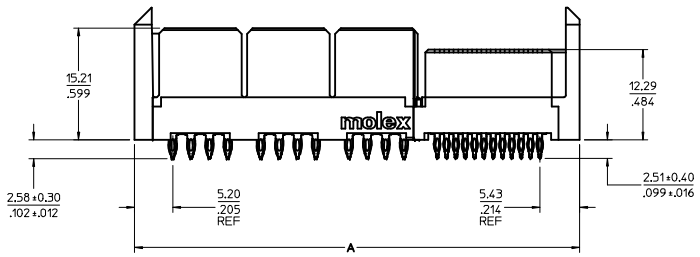


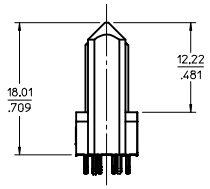


NOTES:
1. MATERIAL: HOUSING: LCP, 94-V0, COLOR: BLACK.
POWER CONTACTS: COPPER ALLOY.
SIGNAL CONTACTS: MODIFIED TIN BRASS.
2. FINISH: SELECT GOLD - 0.75 µM/30 µ INCHES
SELECTED TIN - 2.50 µM/100 µ INCHES
BOTH OVER NICKEL - 1.25 µM/50 µ INCHES

3. POWER TERMINALS ARE LUBRICATED IN CONTACT AREA.
4. PARTS ARE RoHS COMPLIANT.
5. MATES TO MOLEX P/N 45985-SERIES OR EDGE CARD 1.57/.062.
6. PRODUCT SPECIFICATION PS-46114-001.
7. PACKAGING: PER PK-46114-003.

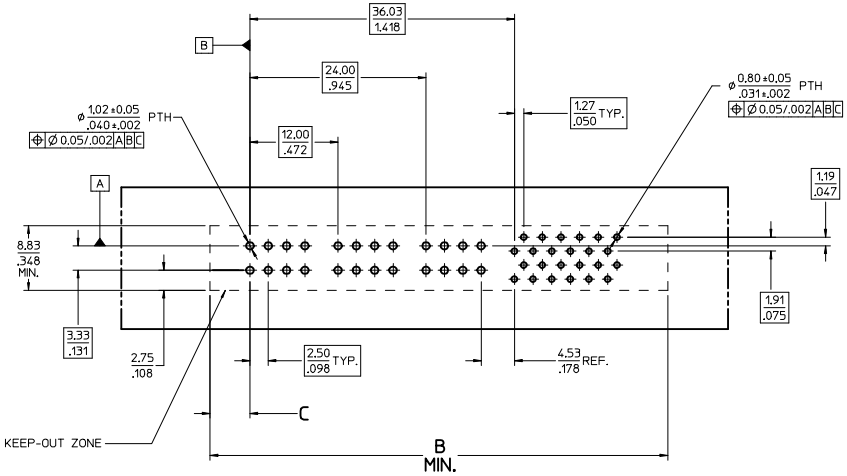


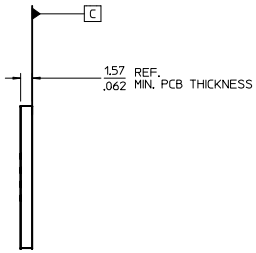


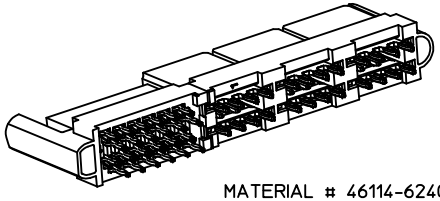

MATERIAL # 46114-6240 SHOWN

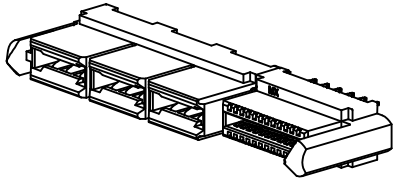

PCB COMPONENT SIDE
par2-of-top2
SCALE 3:1

| | | | |
|---|---|---|---|
| ADD DIMENSION | EC NO: UCP2015-0571 | DRWN:MBANDURA | 2014/08/19 |
| | | CHKD: | |
| | | APPR:APATEL | 2015/04/20 |
| D | | DESCRIPTION | REV |

QUALITY SYMBOLS: ▽=0, ▽=0, ▽=0, ▽=0

GENERAL TOLERANCES (UNLESS SPECIFIED)

| | mm | INCH |
|---|---|---|
| 4 PLACES | ± --- | ± --- |
| 3 PLACES | ± --- | ± .010 |
| 2 PLACES | ± 0.25 | ± --- |
| 1 PLACE | ± --- | ± --- |
| 0 PLACE | ± | ± |

ANGULAR ±1/2°

DRAFT WHERE APPLICABLE MUST REMAIN WITHIN DIMENSIONS

| | | | |
|---|---|---|---|
| DIMENSION STYLE | SCALE | DESIGN UNITS | THIRD ANGLE PROJECTION |
| MM/IN | 3:1 | METRIC | |
| DRAWN BY: MKARADIMAS | DATE: 20051128 | TITLE: LPH VERTICAL RECEPTACLE ASSEMBLY 6 CIRCUIT PWR CONNECTOR, PRESS FIT | |
| CHECKED BY: APATEL | DATE: 10/13/06 | | |
| APPROVED BY: JCOMERCI | DATE: 2009/12/03 | molex | |
| MATERIAL NO.: SEE CHART | | DOCUMENT NO.: SD-46114-600 | SHEET NO.: 1 OF 3 |
| SIZE: D | THIS DRAWING CONTAINS INFORMATION THAT IS PROPRIETARY TO MOLEX INCORPORATED AND SHOULD NOT BE USED WITHOUT WRITTEN PERMISSION | | |

tb_frame_D_P_AM_T
Rev. G 2012/01/11

| NO OF SIGNALS | MATERIAL NUMBER | COMPLIANT PIN PLATING | DIM A | DIM B | DIM C |
|---|---|---|---|---|---|
| 12 | 46114-6121 | TIN | 47.34/1.864 | 47.84/1.883 | 2.69/.106 |
| 16 | 46114-6161 | TIN | 49.88/1.964 | 50.38/1.983 | |
| 20 | 46114-6201 | TIN | 52.42/2.064 | 52.92/2.083 | |
| 24 | 46114-6241 | TIN | 54.96/2.164 | 55.46/2.183 | |
| 28 | 46114-6281 | TIN | 57.50/2.264 | 58.00/2.283 | |
| 32 | 46114-6321 | TIN | 60.04/2.364 | 60.54/2.383 | |
| 36 | 46114-6361 | TIN | 62.58/2.464 | 63.08/2.483 | |
| 40 | 46114-6401 | TIN | 65.12/2.564 | 65.62/2.583 | |

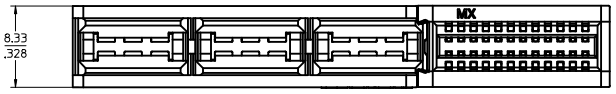


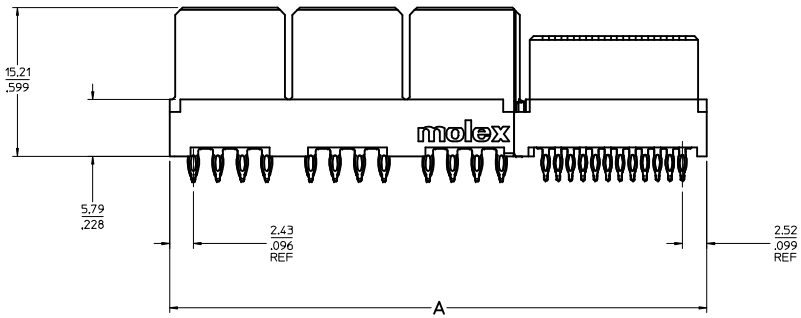


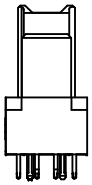

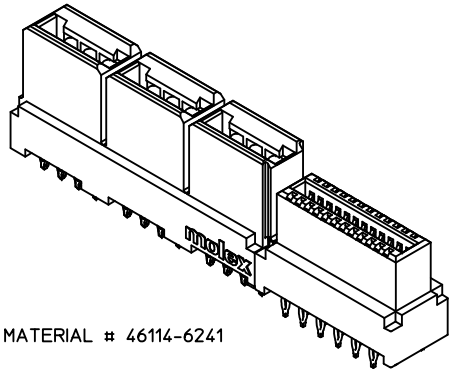


MATERIAL # 46114-6241

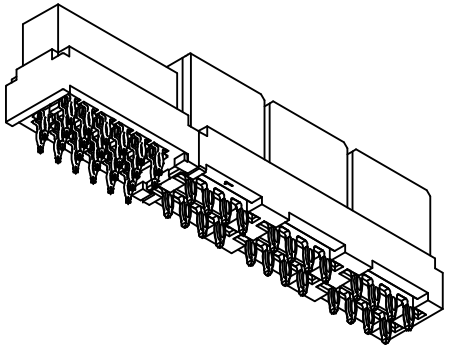

| | | | | | | | |
|---|---|---|---|---|---|---|---|
| SEE SHEET 1<br>EC NO: UCP2015-0571<br>DRWN:MBANDURA 2014/08/19<br>CHKD:<br>APPR:APATEL 2015/04/20<br>D | DESCRIPTION<br>REV | QUALITY SYMBOLS<br>4 PLACES =0<br>3 PLACES =0<br>2 PLACES =0<br>1 PLACE =0<br>0 PLACE | GENERAL TOLERANCES (UNLESS SPECIFIED)<br>mm / INCH<br>4 PLACES ± --- / ± ---<br>3 PLACES ± --- / ± .010<br>2 PLACES ± 0.25 / ± ---<br>1 PLACE ± --- / ± ---<br>0 PLACE ± / ±<br>ANGULAR ±1/2°<br>DRAFT WHERE APPLICABLE MUST REMAIN WITHIN DIMENSIONS | DIMENSION STYLE<br>MM/IN<br>DRAWN BY MKARADIMAS DATE 20051128<br>CHECKED BY APATEL DATE 10/13/06<br>APPROVED BY JCOMERCI DATE 2009/12/03<br>MATERIAL NO.<br>SEE CHART<br>SIZE D | SCALE 4:1<br>DESIGN UNITS METRIC<br>THIRD ANGLE PROJECTION<br>TITLE<br>LPH VERTICAL RECEPTACLE ASSEMBLY 6 CIRCUIT PWR CONNECTOR, PRESS FIT<br>molex<br>DOCUMENT NO.<br>SD-46114-600<br>SHEET NO.<br>2 OF 3 | THIS DRAWING CONTAINS INFORMATION THAT IS PROPRIETARY TO MOLEX INCORPORATED AND SHOULD NOT BE USED WITHOUT WRITTEN PERMISSION | |

| NO OF SIGNAL | DIM. D |
|---|---|
| 12 | 8.00/.315 |
| 16 | 10.54/.415 |
| 20 | 13.08/.515 |
| 24 | 15.62/.615 |
| 28 | 18.16/.715 |
| 32 | 20.70/.815 |
| 36 | 23.24/.915 |
| 40 | 25.78/1.015 |

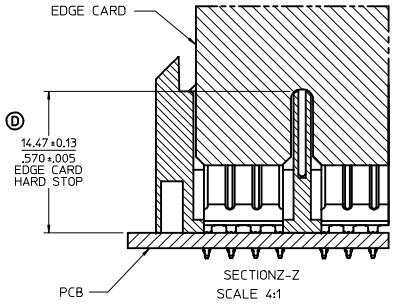


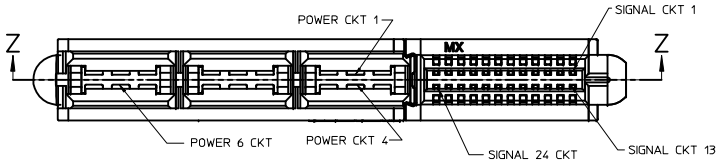


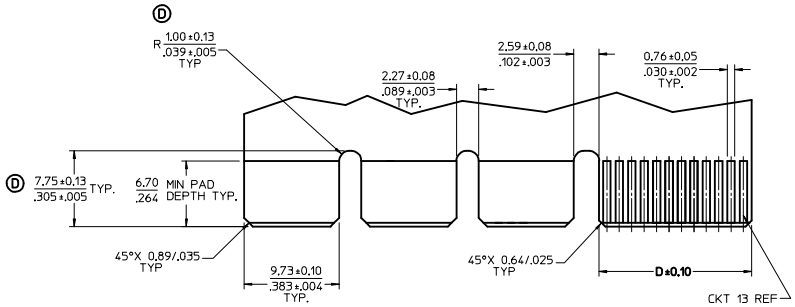

RECOMMENDED EDGE CARD LAYOUT
EDGE CARD THICKNESS: 1.57/.062 ± 0.15/.006
PLATING: GOLD 30 μ INCHES MIN.
OVER 150 μ INCHES NICKEL.

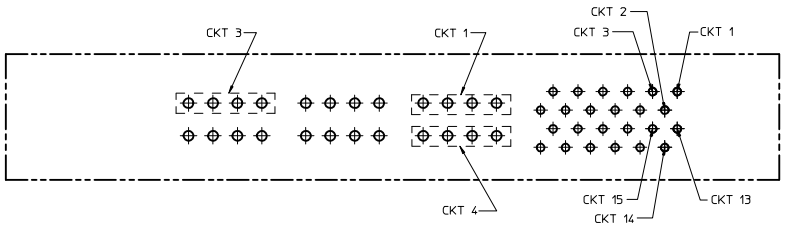


PCB LAYOUT: COMPONENT SIDE
SEE SHT 1 FOR DIMENSIONS

SEE SHEET 1
EC NO: UCP2015-0571 2014/08/19
DRWN:MBANDURA 2015/04/20
CHKD:
APPR:APATEL
DESCRIPTION
REV D

QUALITY SYMBOLS
=0
=0
=0

| GENERAL TOLERANCES (UNLESS SPECIFIED) | mm | INCH |
|---|---|---|
| 4 PLACES | ± --- | ± --- |
| 3 PLACES | ± --- | ± .010 |
| 2 PLACES | ± 0.25 | ± --- |
| 1 PLACE | ± --- | ± --- |
| 0 PLACE | ± | ± |
| ANGULAR ±1/2° | | |

DRAFT WHERE APPLICABLE MUST REMAIN WITHIN DIMENSIONS

DIMENSION STYLE: MM/IN
SCALE: 4:1
DESIGN UNITS: METRIC
THIRD ANGLE PROJECTION

| | | |
|---|---|---|
| DRAWN BY | MKARADIMAS | DATE 20051128 |
| CHECKED BY | APATEL | DATE 10/13/06 |
| APPROVED BY | JCOMERCI | DATE 2009/12/03 |
| MATERIAL NO. | SEE CHART | |

TITLE
LPH VERTICAL RECEPTACLE
ASSEMBLY 6 CIRCUIT
PWR CONNECTOR, PRESS FIT

molex

DOCUMENT NO. SD-46114-600
SHEET NO. 3 OF 3
SIZE D

THIS DRAWING CONTAINS INFORMATION THAT IS PROPRIETARY TO MOLEX INCORPORATED AND SHOULD NOT BE USED WITHOUT WRITTEN PERMISSION